Midterm Exam of ME551 Vibrations in Linear Systems

2000~2023 Previous Midterm Exam Problems (Selected for 2024 midterm exam)

1. Motion of a third order system is described by differential equation as follows:

$$\frac{d^3x}{dt^3}+1.2\frac{d^2x}{dt^2}+4.2\frac{dx}{dt}+4x(t)=f(t)\text{. (15 points)}$$

   (1) Decompose the frequency response function of the above third order system ($G_3(j\omega)$) into two sub-systems, *i.e.*, one of the first order ($G_1(j\omega)$) and the other of the second order ($G_2(j\omega)$). A first order system is characterized typically by break frequency (ω_b) (or time constant) and an under-damped second order system is characterized typically by undamped natural frequency (ω_n) and damping ratio (ζ). (5)

   (2) Draw magnitudes of the frequency response functions of two sub-systems and the total system, approximately, and put in coordinates of the characteristic points of each frequency response function such as $|G_1(0)|, |G_2(0)|, |G_3(0)|, |G_1(\omega_b)|, |G_2(\omega_n)|$, and $|G_3(\omega_n)|$ on the drawing. (5)

   (3) Derive the unit impulse response with zero initial conditions { $\frac{d^2x}{dt^2}(0)=\frac{dx}{dt}(0)=x(0)=0$ }.

   (5) [Hints: Pairs of Laplace-transform: $\frac{1}{s^2+2\varsigma\omega_n s+\omega_n^2} \Leftrightarrow \frac{e^{-\varsigma\omega_n t}}{\omega_d}\sin\omega_d t$,

   $\frac{s}{s^2+2\varsigma\omega_n s+\omega_n^2} \Leftrightarrow -\frac{e^{-\varsigma\omega_n t}}{\sqrt{1-\varsigma^2}}\sin(\omega_d t-\phi_1)$, where $\omega_d=\omega_n\sqrt{1-\varsigma^2}, \phi_1=\cos^{-1}\varsigma$]

2. Fig. 2 shows a composite pendulum of uniform thin rod of mass m and length L rotating about fixed point O, where $(\boldsymbol{i},\boldsymbol{j},\boldsymbol{k})$ denotes a base vector set fixed in space and $(\boldsymbol{e}_r,\boldsymbol{e}_\psi,\boldsymbol{e}_\theta)$ another base vector set fixed in the rod. (25 points)

   (1) Describe angular velocity and angular acceleration of the rod in terms of $\psi,\dot{\psi},\ddot{\psi},\theta,\dot{\theta},\ddot{\theta}$ and $(\boldsymbol{e}_r,\boldsymbol{e}_\psi,\boldsymbol{e}_\theta)$. (5).

   (2) Express angular momentum vector of the rod about the point O ($\boldsymbol{H}_O$). Then, derive equations of motion by using $\boldsymbol{M}_O=\dot{\boldsymbol{H}}_O$ or the Euler equations for a body rotating about a fixed point. (5)

   (3) Express kinetic and potential energy of the rod and derive equations of motion by applying the Lagrange equations. (5)

   (4) Do you see any differences between your answers in (2) and those in (3). If you see, what are those? (2)

   (5) Noting that the system is conservative, state what and how many properties are conserved in the motion of the spherical composite pendulum. (3)

   (6) Check whether the differential equations in (2) or (3) can be obtained by manipulations, *e.g.*, time-differentiation, of the conserved quantities in 5). (5)

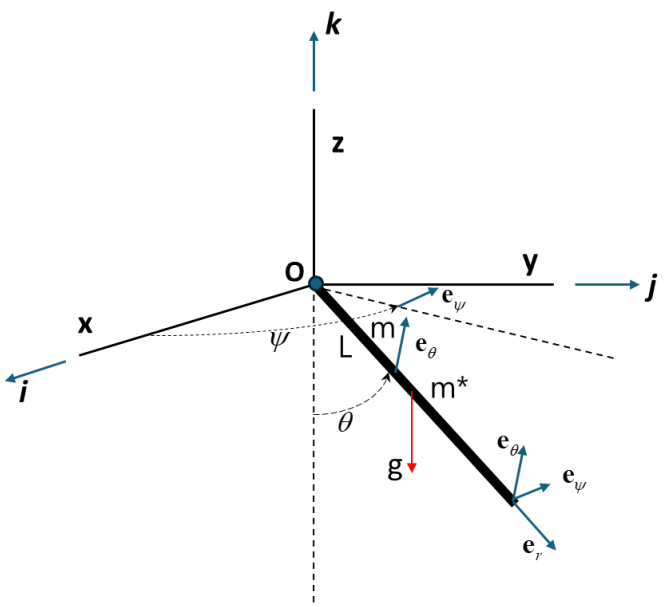

Fig. 2 3-dimensional composite pendulum.

3. The system in Fig. 3 consists of a smooth massless hoop of radius R rotating with a constant speed Ω about a vertical axis. A bead of mass m can slide freely along the hoop. The angular position of the bead on the hoop is described by θ and the gravity is given by g. (20 points)

(1) Derive equation of motion of bead of mass m using the Lagrange equation. (5)
(2) Find out equilibrium position of the bead θ_0 and range of the rotation speed Ω which enables the bead to be in equilibrium for $0 < \theta_0 < \pi$. (5)
(3) Linearize equation of motion for small motions around the equilibrium position θ_0 obtained in (2). (5)
(4) Check whether the linearized system is stable or not. If the system is stable, obtain natural frequency of the system in terms g, R and Ω. (5)

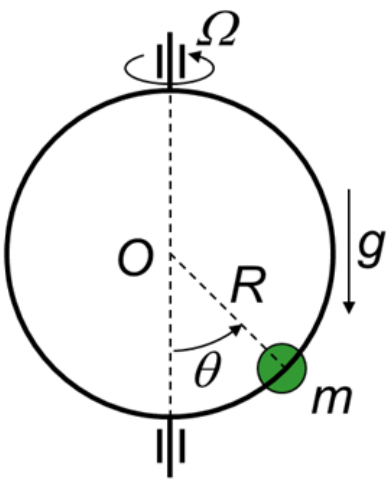

Fig. 3 Mass moving on rotating hoop.

4. Consider vibrations of a two-DOF system shown in Fig. 4, where the mass and the stiffness are given by $m_1 = 1, m_2 = 4\,\text{kg}, k_1 = 25, k_2 = 100\,\text{N/m}$. (40 points)

(1) Damping coefficients are given by $c_1 = 0.5, c_2 = 2N \cdot \text{sec}/m$ and, hence, are proportional to the mass and stiffness coefficients. (7)

1) Obtain mode shape vectors of the undamped system, derive equations of damped motion in the modal coordinates, and obtain undamped natural frequencies, damping ratios and damped natural frequencies. (3)
2) Formulate a state equation, then, solve the corresponding eigenvalue problem to obtain the undamped natural frequencies, damping ratios and damped natural frequencies. Check whether the results are the same as those obtained in 1). (4)

(2) For the damping coefficients given in (1) and initial conditions given by $q_1(0) = 0\text{ m}, q_2(0) = 0\text{ m}, \dot{q}_1(0) = -9.239\text{ m/s}, \dot{q}_2(0) = 1.913\text{ m/s}$, obtain $q_1(t)$ and $q_2(t)$. (8)
[Hint: The response of a single degree of freedom system with undamped natural frequency ω_n, damping ratio ζ, and damped natural frequency ω_d due to an initial displacement η_0 and initial velocity $\dot{\eta}_0$ is given by

$$\eta(t) = e^{-\zeta\omega_n t}\left[\eta_0\left(\cos\omega_d t + \frac{\zeta\omega_n}{\omega_d}\sin\omega_d t\right) + \frac{\dot{\eta}_0}{\omega_d}\sin\omega_d t\right].]$$

(3) When the damping coefficients are given by $c_1 = 2, c_2 = 0.5\text{ N}\cdot\text{sec/m}$, (25)

1) Check whether the damping matrix in this case is proportional to the mass and stiffness matrices. Formulate a state equation $\boldsymbol{A}\dot{\boldsymbol{x}} = \boldsymbol{x}(t)$, where $\boldsymbol{x}$ is a 4×1 state vector, and obtain eigenvalues and eigenvectors for the two 4×4 matrices $\boldsymbol{A}$ and $\boldsymbol{A}^T$. (5)
2) Obtain undamped natural frequencies, damping ratios and damped natural frequencies. (5)
3) Check whether the eigenvectors of the two matrices $\boldsymbol{A}$ and $\boldsymbol{A}^T$ obtained in 1) are bi-orthogonal to each other or not. If not, bi-orthonormalize the left eigenvectors (5)
4) Obtain $q_1(t)$ and $q_2(t)$ and explain key differences, if any, from those in (2). (5)
5) It is required that the system vibrate just at the second mode by choosing proper initial conditions. Obtain such an initial condition. (5)

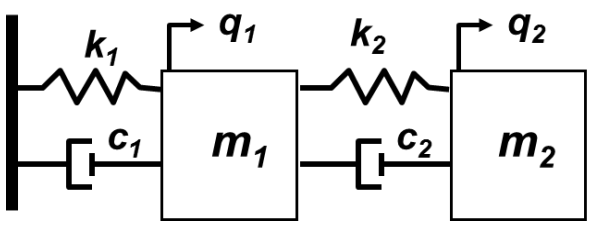

Fig. 4 Two degree of freedom system.

5. Fig. 5 shows four systems: a) 1-DOF system, b) 1-st order (or half-DOF) system, c) a system constructed by combining the two systems in series, and d) a system constructed by combining the first two systems in parallel. Dynamic compliance transfer functions of the first two systems in Figs. a) and b) are given by $G_a(s) \equiv \dfrac{q_1(s)}{f_1(s)} = \dfrac{1}{m_1 s^2 + c_1 s + k_1}$ and $G_b(s) \equiv \dfrac{q_2(s)}{f_2(s)} = \dfrac{1}{c_2 s + k_2}$, respectively, in terms of the Laplace operator s. (30 points)

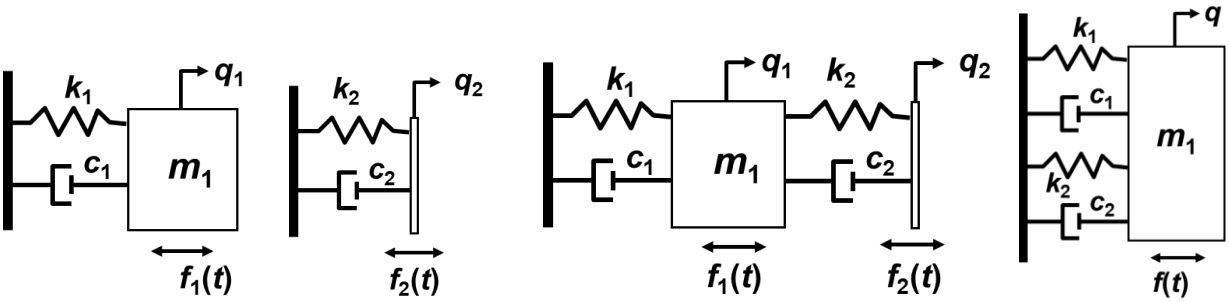

a) 1-DOF system b) 1-st order system c) a)&b) in series d) a)&b) in parallel

Fig. 5 1-DOF system, 1-st order system, and two more systems constructed by combining these in series and parallel. Black support means fixed, and white support means freely moving.

(1) Obtain dynamic compliance of the third system in Fig. c) at the right end defined by $G_{c22}(s) \equiv \dfrac{q_2(s)}{f_2(s)}$ as we obtain equivalent compliance for two springs of stiffness k_1 and k_2 combined in series. (2)

(2) Obtain dynamic compliance of the fourth system $G_d(s) \equiv \dfrac{q(s)}{f(s)}$ in Fig. d) as we do for two springs of stiffness k_1 and k_2 combined in parallel. (2)

(3) Derive equations of motion for the system in Fig. c) by applying the Newton's second law and then obtain 4 elements of the 2×2 dynamic compliance matrix $\boldsymbol{G}_c(s)$, which is defined by

$$\begin{Bmatrix} q_1(s) \\ q_2(s) \end{Bmatrix} = \boldsymbol{G}_c(s) \begin{Bmatrix} f_1(s) \\ f_2(s) \end{Bmatrix}, \text{ where } \boldsymbol{G}_c(s) = \begin{bmatrix} G_{c11}(s) & G_{c12}(s) \\ G_{c21}(s) & G_{c22}(s) \end{bmatrix},$$

based on those equations of motion. Obtain $G_{cij}(s), i, j = 1, 2$ and check whether $G_{c22}(s)$ in your answer here is the same as the one in (1). (8)

(4) Dynamic stiffness matrix of the system in Fig. c) is defined as the inverse of the dynamic compliance matrix as follows:

$$\begin{Bmatrix} f_1(s) \\ f_2(s) \end{Bmatrix} = \boldsymbol{D}_c(s) \begin{Bmatrix} q_1(s) \\ q_2(s) \end{Bmatrix}, \textit{ i.e., } \boldsymbol{D}_c(s) = \boldsymbol{G}_c^{-1}(s).$$

Obtain 4 elements of the 2×2 dynamic stiffness matrix $\boldsymbol{D}_c(s)$. (6)

(5) Check whether each element of the dynamic stiffness matrix is the same as simple inverse of the corresponding element of the dynamic compliance matrix, *i.e.*, check whether $D_{cij}(s) = G_{cij}^{-1}(s)$ is true or not. If $D_{cij}(s) \neq G_{cij}^{-1}(s)$, explain why it is so by considering

definitions of $G_{cij}(s)$ and $D_{cij}(s)$ in equations in (3) and (4). (4)

(6) For the system in Fig. c) with parameters given as follows:

$$m_1 = 1\text{ Kg},\ c_1 = 0.05\text{ N/(m/s)}, k_1 = 25\text{ N/m},\ c_2 = 0.5\text{ N/(m/s)},\ k_2 = 1.25\text{ N/m},$$

draw four dynamic compliance frequency response functions in terms of magnitude and phase in linear scale:

$$G_{c11}(j\omega) = \frac{q_1}{f_1}(j\omega), G_{c12}(j\omega) = \frac{q_1}{f_2}(j\omega), G_{c21}(j\omega) = \frac{q_2}{f_1}(j\omega), G_{c22}(j\omega) = \frac{q_2}{f_2}(j\omega),$$

just approximately, and put ordinates of characteristic points such as frequency $\omega = 0$, break frequency, natural frequency, and $\omega = \infty$ on the drawing. (8)

6. The system in Fig. 6 consists of a body of circular ring with radius r and moment of inertia I supported by torsional spring of stiffness k_t, which can rotate about the vertical axis, and a particle of bead with mass m which can slide along the ring without friction. The angular position of the ring in the fixed space and that of the bead on the ring are described by ϕ and θ, respectively. The base vector set stays in the plane of the ring and the gravity is given by g. (30 points)

(1) Express angular velocity of the base vector set shown in the figure and velocity vector of the bead by using the base vector set. (4)
(2) Express acceleration vector of the bead by using the base vector set shown in the figure. (4)
(3) Considering that the system has one body and a particle and there exist interaction or constraint forces between the ring and the bead, derive equations of motion by applying the Newton-Euler equations to each body/particle. State how many equations and unknowns you have in the whole equations and whether the equations are solvable or not. (6)
(4) Derive equations of motion by applying the Lagrange equation and check whether the results are the same as those in (3). Discuss about what are the differences between the vector mechanics: dynamics approach and the analytical Lagrange approach. (6)
(5) State whether the equations of motion obtained in (4) are coupled to each other or not. (2)
(6) Obtain angular position for the system to be in equilibrium. (2)
(7) Assuming small angular displacements, linearize equations of motion at the equilibrium position. (2)
(8) State whether the linearized equations are coupled to each other or not and obtain natural frequencies. (4)

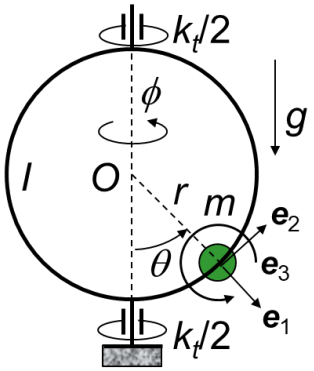

Fig. 6 A Circular ring with a bead on it

7. Consider a two-DOF system shown in Fig. 7, where masses and stiffness coefficients are given by $m_1 = 4$ kg, $m_2 = 1$kg, $k_1 = 16$ N/m, $k_2 = 64$ N/m . (40 points)

(1) Damping coefficients are given by $c_1 = 0.25\ \mathrm{N \cdot s/m}, c_2 = 1\ \mathrm{N \cdot s/m}$ which are proportional to the stiffness coefficients. (18)

1) Obtain natural frequencies and mode shape vectors of the undamped system, derive equations of the damped motion in the modal coordinates, and obtain damping ratios and damped natural frequencies. (5)
2) Formulate a state equation, then, solve the corresponding eigenvalue problem to obtain the undamped natural frequencies, damping ratios and damped natural frequencies. Check whether the results here are the same as those obtained in 1). (5)
3) For the impulse excitations given by $f_1(t) = 1.77\delta(t)\ \mathrm{N \cdot s}$, $f_2(t) = 0.4655\delta(t)\ \mathrm{N \cdot s}$, where $\delta(t)$ is the Dirac delta function, show that only the first mode is excited. Then, obtain $q_1(t)$ and $q_2(t)$ by the modal analysis approach. (8)

[Hint: The response of a single degree of freedom system with undamped natural frequency ω_n, damping ratio ζ , and damped natural frequency ω_d due to an initial displacement η_0 and initial velocity $\dot{\eta}_0$ is given by $\eta(t) = e^{-\zeta\omega_n t}\left[\eta_0\left(\cos\omega_d t + \frac{\zeta\omega_n}{\omega_d}\sin\omega_d t\right) + \frac{\dot{\eta}_0}{\omega_d}\sin\omega_d t\right]$.]

(2) When the damping coefficients are given by $c_1 = 0.64\ \mathrm{N \cdot s/m}, c_2 = 0.49\ \mathrm{N \cdot s/m}$, (22)

1) Check whether the damping matrix is proportional to the mass and/or stiffness matrices. Formulate a state equation $\boldsymbol{A}\dot{\boldsymbol{x}} = \boldsymbol{x}(t)$, where $\boldsymbol{A} = \begin{bmatrix} 0 & \boldsymbol{I} \\ -\boldsymbol{M}^{-1}\boldsymbol{K} & -\boldsymbol{M}^{-1}\boldsymbol{C} \end{bmatrix}$ and $\boldsymbol{x} = \begin{bmatrix} q_1 & q_2 & \dot{q}_1 & \dot{q}_2 \end{bmatrix}^T$ is a 4×1 state vector, and obtain eigenvalues and eigenvectors for the 4×4 matrix $\boldsymbol{A}$. (4)
2) Obtain undamped natural frequencies, damping ratios and damped natural frequencies. (4)
3) Check whether the right and left eigenvectors of the matrix $\boldsymbol{A}$ obtained in 1) are bi-orthonormal to each other or not. If not, bi-orthonormalize the left eigenvectors. (4)
4) Obtain $q_1(t)$ and $q_2(t)$ for the impulse excitations given in (1)-3) and explain differences between the results here and those obtained in (1)-3). (6)
5) For the damping coefficients given in (1) instead of those given here in (2), obtain $q_1(t)$ and $q_2(t)$ to the impulse excitations given in (1)-3) using the state equation approach, and check differences among the results here, those in (1)-3), and those in (2)-4). (4)

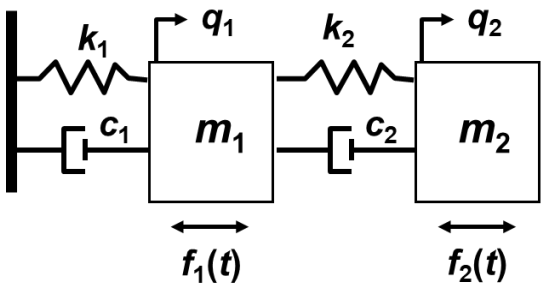

Fig. 7 A linear two-DOF system

Bonus Problem

(5pts) Please make a mechanical vibration problem by yourself and show the solution procedure. Any problem ideated from ME551 and proper answer will be fully credited.